DWG. NO.	SH	REV

REVISIONS

ZONE	REV	ECO NO.	DESCRIPTION	DATE	APPROVED
	A		PRELIMINARY RELEASE	6-93	
	B		ENGINEERING UPDATE	7-93	
	C		ENGINEERING UPDATE	9-93	

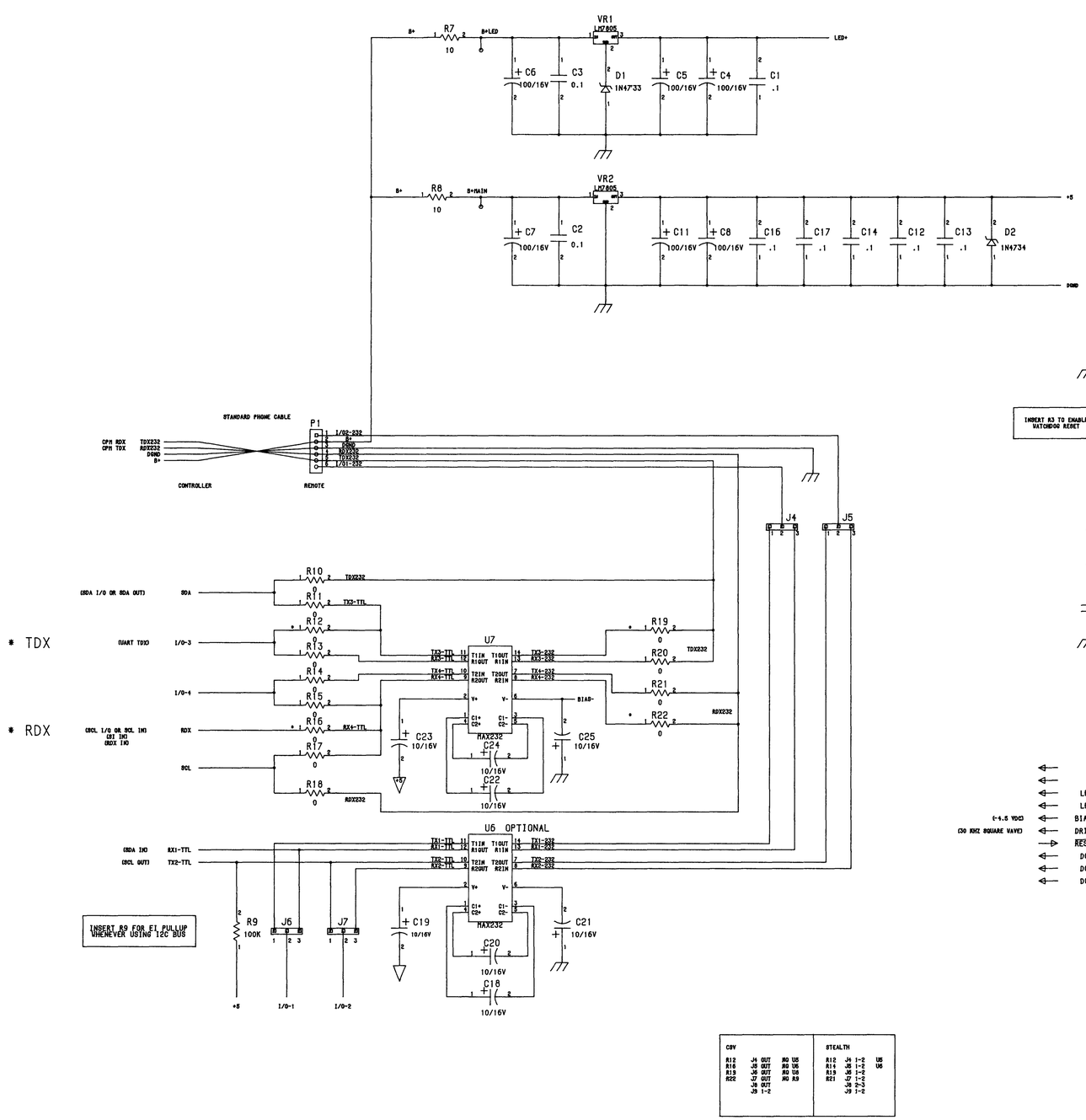

C8V			STEALTH		
R12	J4 OUT	NO U5	R12	J4 1-2	U5
R14	J5 OUT	NO U6	R14	J5 1-2	U6
R19	J6 OUT	NO U8	R19	J6 1-2	
R22	J7 OUT	NO R9	R21	J7 1-2	
	J6 OUT			J6 2-3	
	J9 1-2			J9 1-2	

LAST USED LIST

DO NOT SCALE DRAWING

	APPROVALS	DATE
DRAWN	HARRIS	6-93
CHECKED		
FINISH		

ROCKFORD CORPORATION
TEMPE AZ.

TITLE
SCHEMATIC, SYMMETRY
BRAIN BOARD (RDAT) EPX

SIZE D | DWG NO. SCH-0634

SCALE NONE | SHEET 1 OF 1